Flue Gas Desulphurization (FGD) plant 2 x 600 MW Coal based Thermal power plant Cuddalore, Tamil Nadu.

By MK Parameswaran

23rd Dec, 2016

Introduction

Flue Gas Desulfurization is a process of removing Sulphur from flue gas of Thermal power plant before it is released into the atmosphere.

Introduction contd..

IL&FS Tamilnadu Power Co. Ltd, uses Limestone Wet Spray type Flue Gas Desulphurisation system.

Our wet FGD system, also called a wet scrubber system, is based on the principle that limestone, in the form of slurry is brought into contact with the flue gas which absorbs the SO_2 in it.

Our FGD is designed for 100% BMCR condition with sulphur content 0.8% in Coal and desulfurization efficiency ≥95%.

Salient Features

- Wet Type Desulphurisation System Consist Of :
  - Absorber
  - Gas To Gas Heat Exchanger (GGH)
  - Booster Fan
  - Slurry System
  - Gypsum De-hydration & Waste Water Treatment System
  - Ducting System
  - Electrical And Instrumentation

FGD Process Diagram

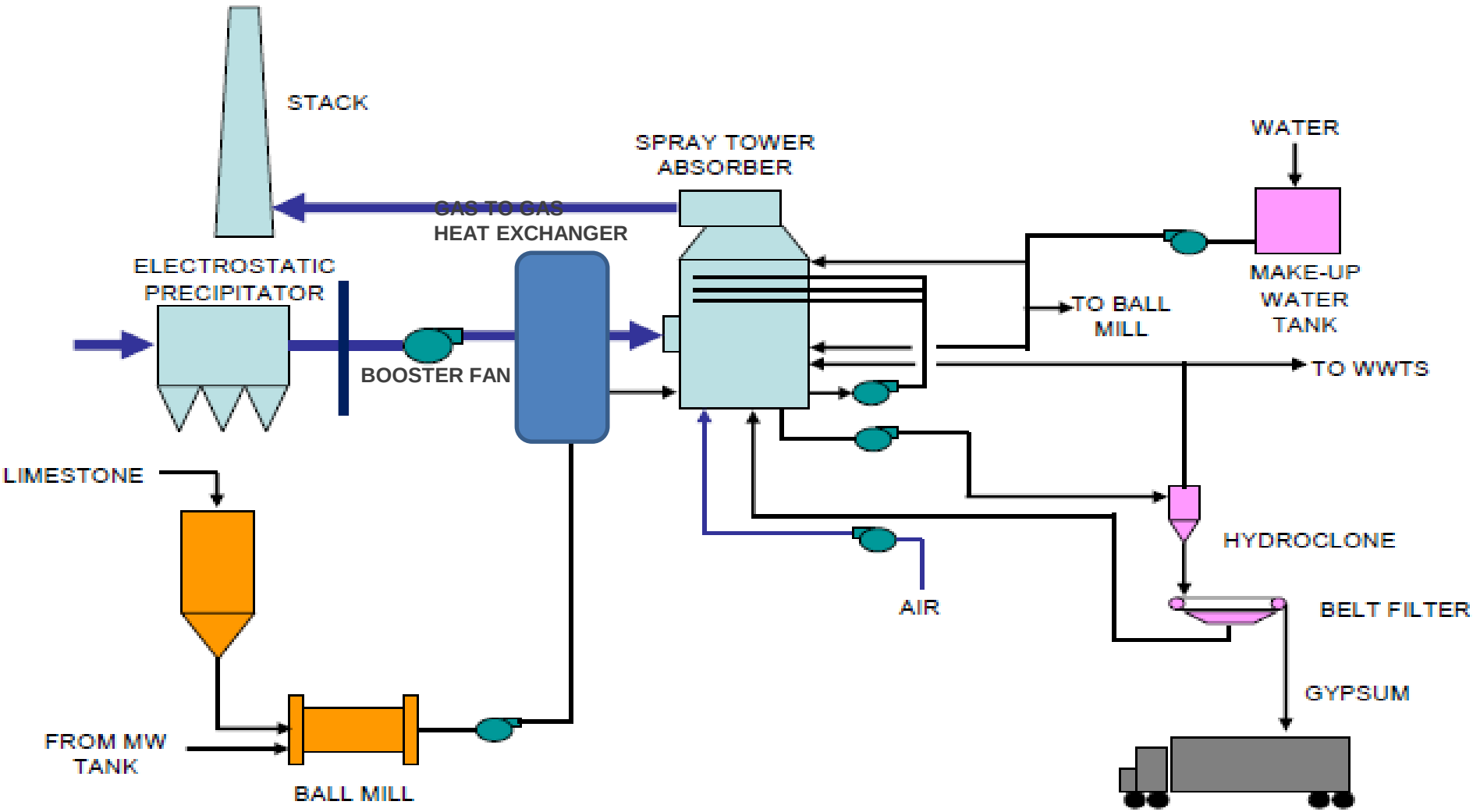

Overview of FGD

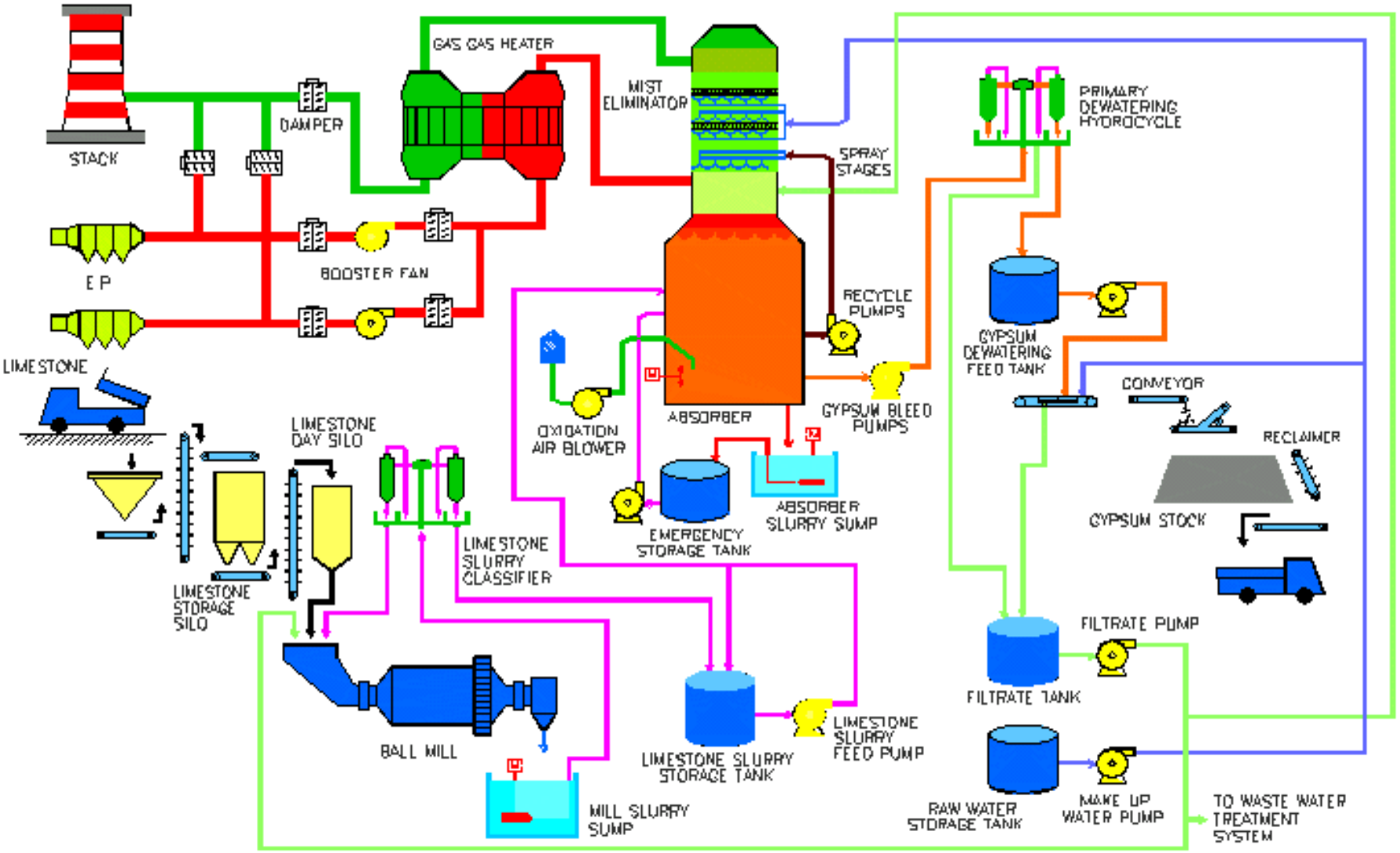

Construction details

- NUMER OF PILES

  - UNIT # 1 & COMMON SYSTEMS : 773 Nos.
  - UNIT # 2 : 280 Nos.

  Total : 1053 Nos.

- RCC QUANTITY

  - UNIT # 1 & COMMON SYSTEMS : 9000 Cu.M.
  - UNIT # 2 : 3000 Cu.M.

  Total : 12000 Cu.M.

Construction details

- STRUCTURAL STEEL

  - UNIT # 1 & COMMON SYSTEMS : 2500 MT
  - UNIT # 2 : 1000 MT

  Total : 3500 MT

- EQUIPMENTS

  - UNIT # 1 & COMMON SYSTEMS : 2500 MT
  - UNIT # 2 : 1000 MT

  Total : 3500 MT

Absorber details

- Absorber is the main equipment where the sulphur is removed from flue gas.
- It is a 41.5 M Height shell of 17.6 M. Dia and total weight of 510 MT
- The internal surface is coated with anti corrosion paint up to 4 mm thickness to protect from corrosion.
- The external surface is protected with thermal insulation.
- The limestone slurry is sprayed inside the absorber through the spray headers and nozzles which comes in contact with the flue gas passing through it and removes the sulphur in it.

Absorber construction

PILES FOR ABSORBER

Absorber construction

Absorber construction

Absorber construction

Absorber construction

Absorber construction

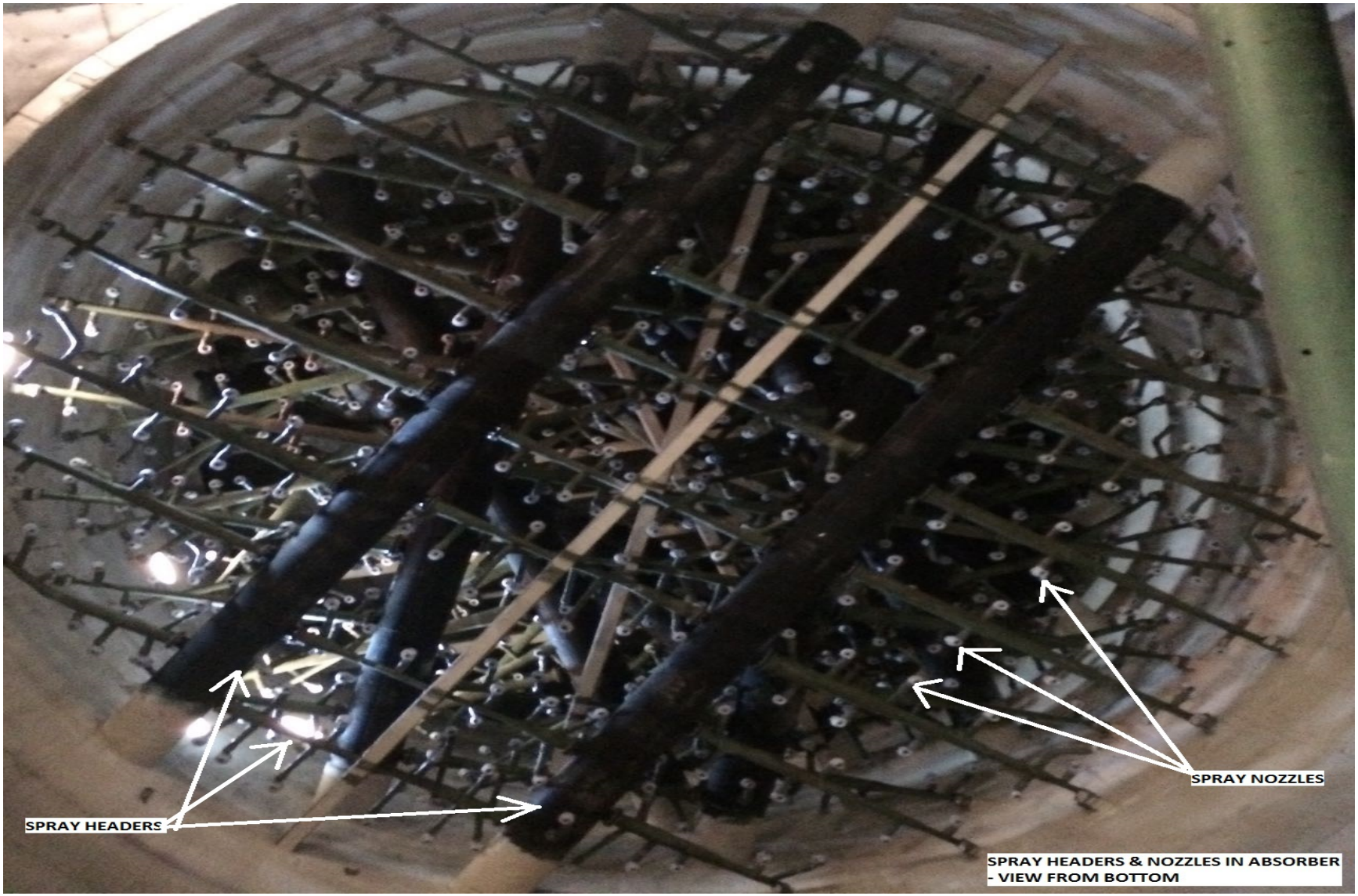

SPRAY HEADERS & NOZZLES IN ABSORBER - VIEW FROM BOTTOM

Booster Fan

Gas to Gas Heat Exchanger

Tanks

COOLING WATER TANK, PROCESS WATER TANK & EMERGENCY SLURRY TANK

Wet Ball Mills

Limestone Slurry Tanks

Slurry Recirculation Pumps

Limestone Silo/Bucket Elevator

Gypsum Dehydration

Gypsum Dehydration System

Chemical Process

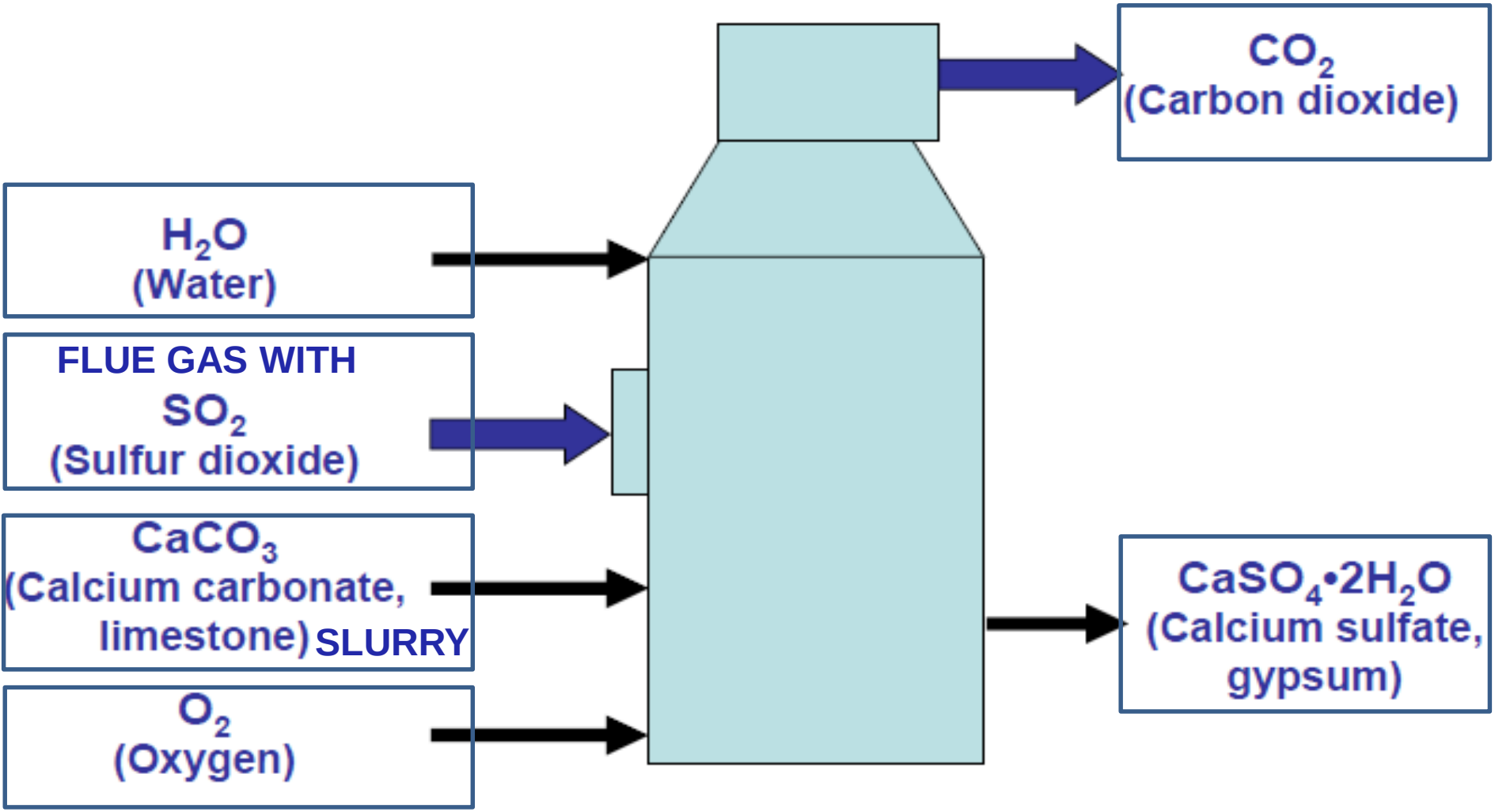

$$SO_2 + CaCO_3 + \tfrac{1}{2}O_2 + H_2O \rightarrow CaSO_4 \cdot 2H_2O + CO_2$$

System Description

- The main task of the absorber is to remove sulfur dioxide from flue gas and to produce gypsum as a disposable product.
- The gas flows upwards through the absorption zone and is washed counter currently by a spray of slurry droplets, containing suspended gypsum and limestone for the reaction with SO2.
- Finally the formed sulfate and calcium ions crystallize in the absorber recycle tank as a gypsum.
- Gypsum will be dewatered and the waste water will be again treated and reused in the process .
- Final waste water will be again treated suitably and discharged with recommended quality.

Slurry Pumps

SLURRY RECIRCULATION PUMP HOUSE

SLURRY RECIRCULATION PUMP VIEW

Absorber System

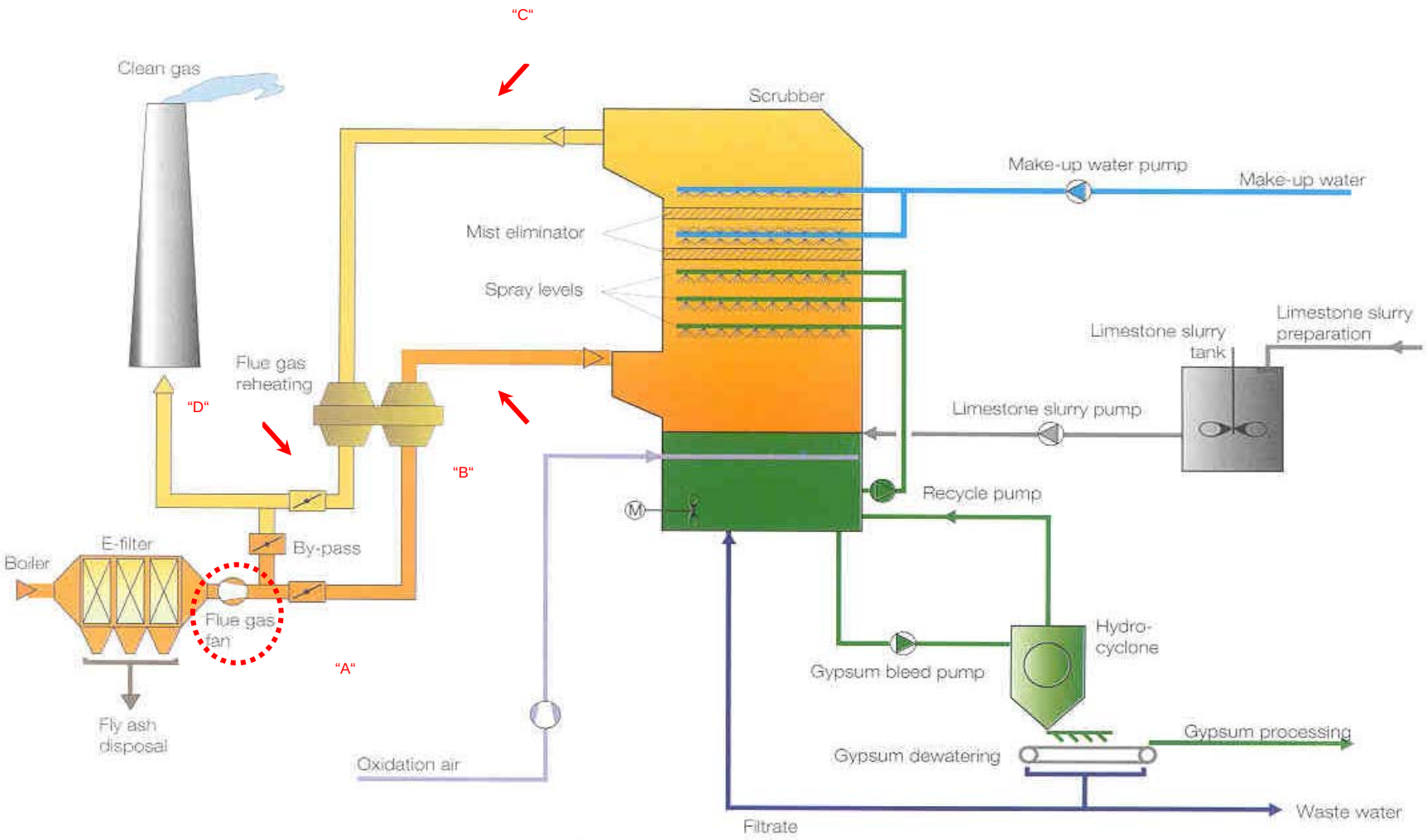

Schematic diagram of the limestone scrubbing process

Limestone Slurry System

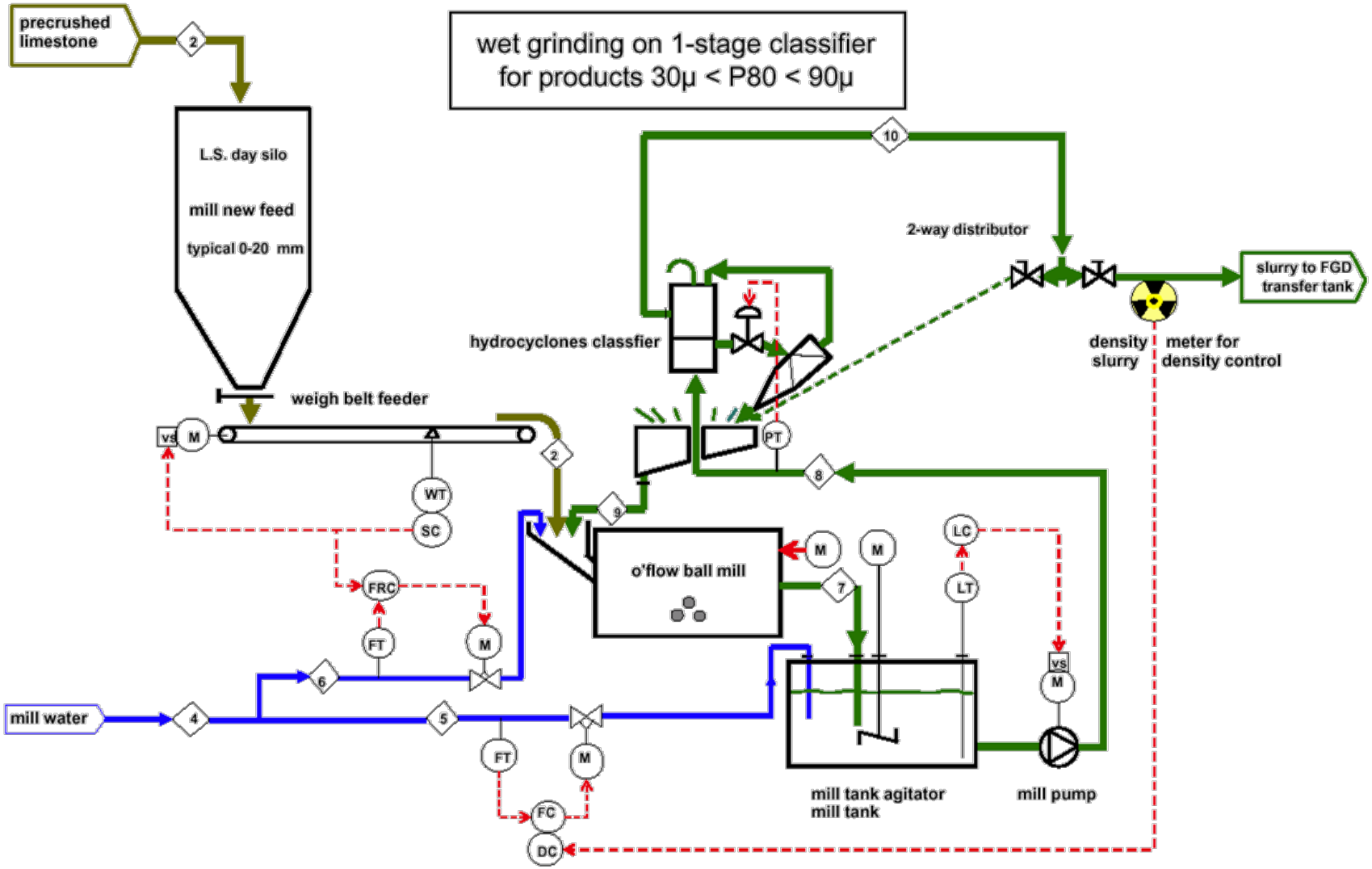

Limestone Slurry Process

- The Wet Ball Mill system ensures lime stone crushing upto particle size of 44 micron (325 mesh - 90%).
- Hydro cyclone is used to separate the limestone slurry at the wet Ball Mill outlet.
- Each set of mill is equipped with a group of limestone slurry hydro cyclones, and can meet the requirement of limestone slurry fineness.
- Concentration of limestone slurry can be correctly controlled in any concentration upto 25-30%wt.

Wet Ball Mills

WET BALL MILL WITH RECIRCULATION SYSTEM

WET BALL MILL

Gypsum Slurry Dehydration

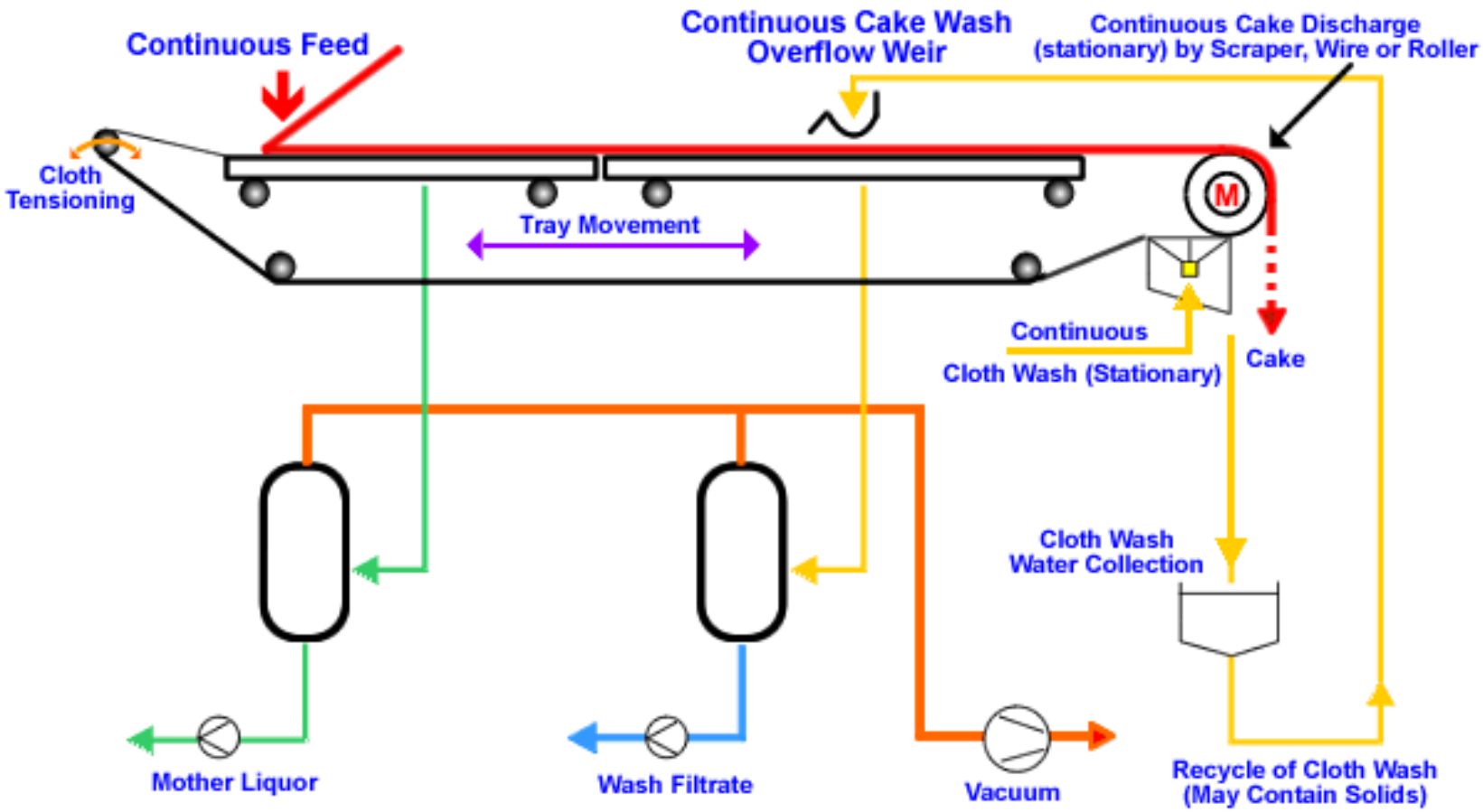

Gypsum Slurry Dehydration

Vacuum belt Feeder

Cloth wash process

Hydro cyclone

Cake wash process

Gypsum Slurry Dehydration

- The system is common for both units. The main equipments include 2 gypsum hydro cyclones, 2 vacuum belt filters, 2 vacuum pumps, 2 set of filter water system.
- Each vacuum belt filter and hydro cyclone will be based on the capacity of 100% BMCR worst coal condition.
- Gypsum Slurry from Absorber flows into the gypsum hydro cyclone to be concentrated. Moisture of the gypsum cake is about 10%.
- The overflow of hydro cyclone split into two categories: one part be transported to the filtrate water tank, the other parts flow into the waste-water tank and be transported to waste water hydro cyclone.

Process water quality

SI.NO.	Description	Unit	Value
1	Total Dissolved Solids (TDS)	Ppm	350-500
2	Calcium	Ppm	1.5
3	Magnesium	Ppm	3.5
4	Potassium	Ppm	6.5
5	Bicarbonates	Ppm	2.0
6	Chlorides	Ppm	215
7	Sulphates	Ppm	5.0
8	Nitrates	Ppm	0.1
9	Boron	Ppm	1.2
10	Silica	Ppm	0.1

Water Requirement

Process Water input : 100 TPH per FGD.

		TPH
Process water	Waste water discharge	9.8
Process water	Gypsum Cake 10% moisture	1.7
Chemical water	Gypsum Cake	3
Saturated water	Clean gas - evaporation	39.6
Process water	Clean gas - Mist eliminator (evaporation or carryover)	0.155
Process water	Sludge treatment system Consumption	0.084
Chemical water	Water consumed by Dissolved soluble substances	0.071
	Total break up	54.41

Other details…

Total Auxiliary power consumption for the FGD plant at 100% TMCR condition on firing worst coal is less than **23902 KW**, for the two FGD units with common auxiliary facilities.

Limestone consumption per FGD at 100 % TMCR Condition on firing worst coal is less than **3.8TPH.**

Gypsum production per FGD **6.0 TPH**

Lime Stone Quality

Sl.NO.	Constituents	Unit	% by Weight
1	Silica as SiO2	%	4-6
2	Iron as Fe2O3	%	1.5-2.2
3	Aluminium as Al2O3	%	1.8-2.8
4	CaCO3	%	85-89（CaCO3>85%）
5	MgCO3	%	
6	Acid Insoluble	%	Below 1%
7	Others	%	
8	Inherent Moisture Content	%	
9	Bond Work index	KWH/T	13
10	Raw limestone size	mm	≤20

Waste Water System

FGD system will produce a small amount of waste water, The main task of the waste water treatment plant is to adjust the pH and to remove the heavy metals and suspended solids.

The final out put of WWS will be as below always

DESIGN:

pH	- **6-9**
Residual chlorine	- **0 ppm**
Oil and grease	- **< 1 ppm**
Effluent quantity discharge for 2 units	- **< 24 m3/h**

☙ THANK YOU ❧